GENUS

GE-MK/1 - Elite Matte Box Kit

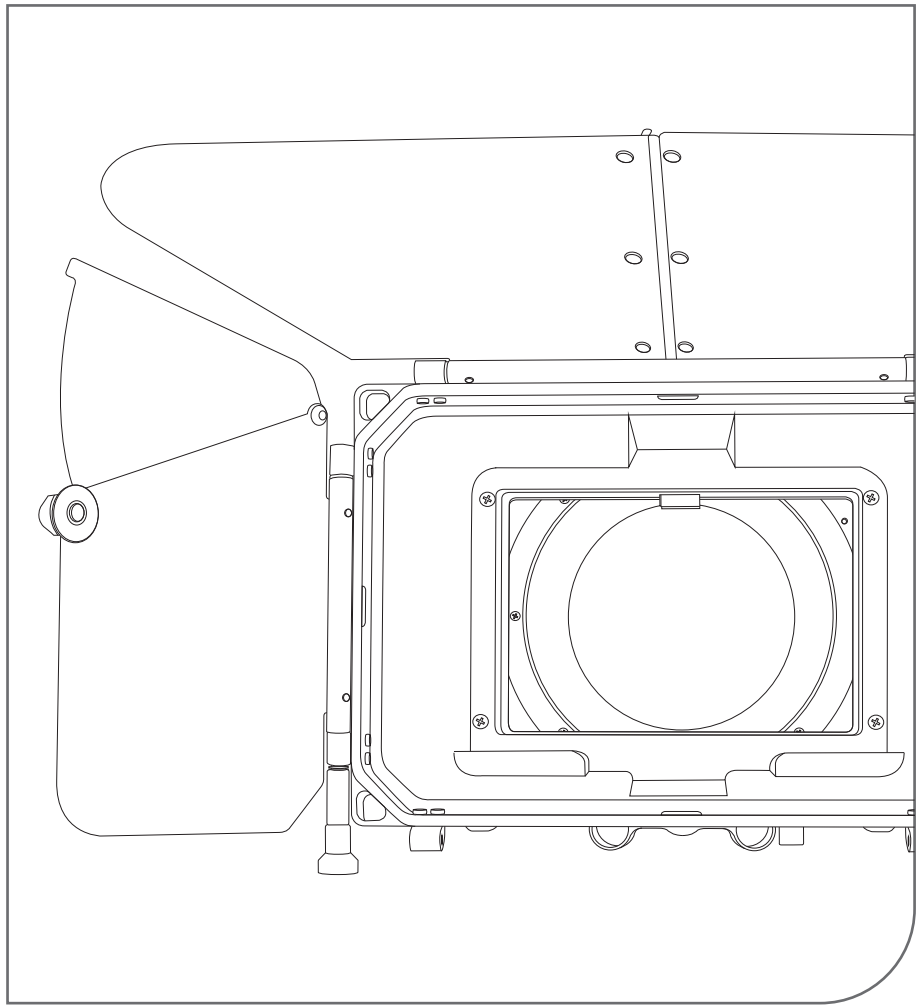

GENUS PRODUCTS

Shoulder Mount Systems
Matte Boxes
Support Bar Systems
Adaptor Plates
Adaptor Rings & Donuts
French Flags
DSLR Camera Accessories
and more

WARRANTY

Your Genus Elite Matte box Kit is covered by a one year warranty from the date of purchase.

Full terms and conditions of warranty can be found on our website

www.genustech.tv

Date of Purchase

Dealer

© 2011 Genus Limited. All rights reserved.
Reproduction in whole or in part without permission is prohibited. Features and offers are subject to change without further notice.

The GE-MK/1 Elite matte box Kit

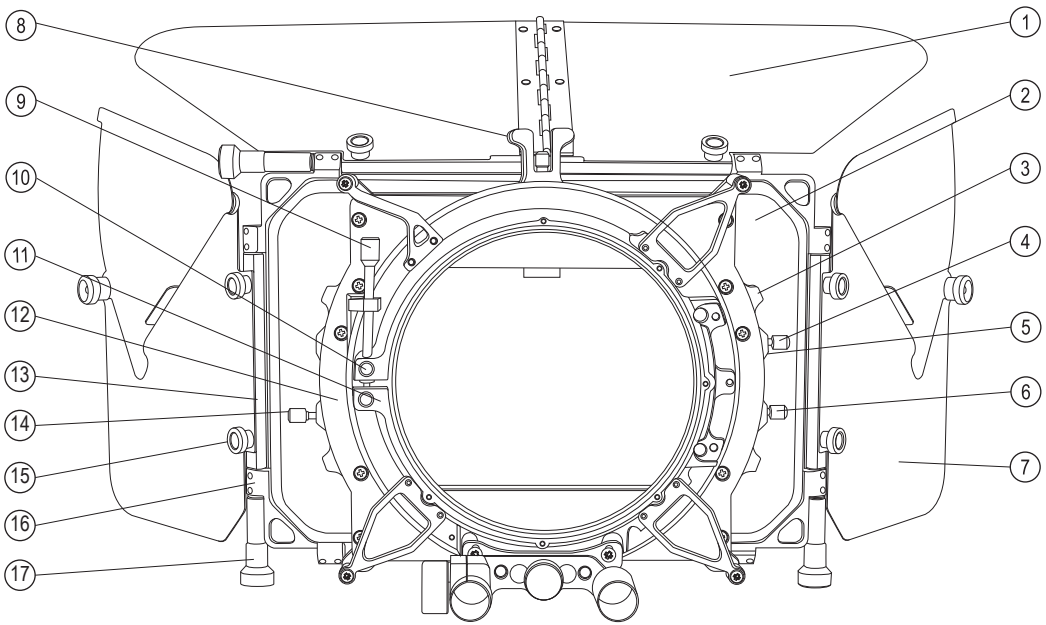

1 Elite French Flag
2 Rayshade
3 Back Filter Tray Rails (rotating)
4 Tray Lock Screw (back)
5 Front Filter Tray Rails (fixed)
6 Tray Lock Screw (front)
7 Elite Side Flag
8 Elite Filter Tray
9 Back Clamp Screw
10 Back Clamp Ring Ident
11 Back Clamp Ring
12 Back Plate
13 Flag Spindle
14 Filter Tray Rotation Damper
15 Spindle Screw
16 Spindle Hinge
17 Lock Knob

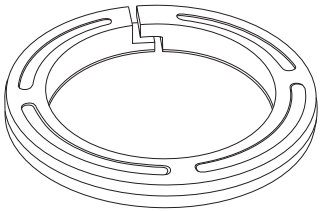

Elite Clamp On Adaptor Ring

Attaching Flags to the Elite Matte Box

1 Loosen the Spindle Screw.
2 Tighten the Spindle Screw to attach the flag to the Flag Spindle.
3 Loosen the tension on the *Spindle Hinge* by turning the *Lock Knob* and lift the flag to the desired angle.
4 Tighten the *Lock Knob* to hold the *Flag* in place.
5 To remove the *Flag* from the *Flag Spindle*, simply loosen the two *Spindle Screws* to slide the *Flag* off.

Instructions

Inserting Filters

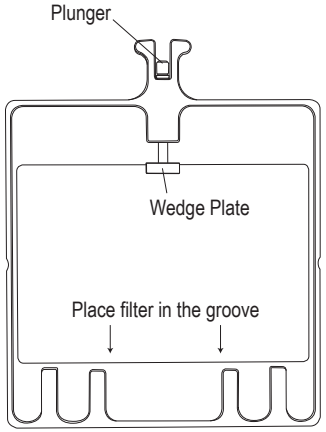

Example **Filter Tray**

1 The Elite matte box comes with two filter trays; one of which can be rotated 360°. To place the filters into the filter holders you need to remove the filter trays from the Elite matte box.
2 Place the filter into the filter holder groove at the bottom end of the filter tray first.
3 Lift up the plunger of the filter tray and position the filter into the top groove and then release the plunger so that the filter is held firmly in place by the wedge plate.
4 The rear tray denotes the rotating filter and should be used for filters such as Polarizer's and Star Filter's, and is always positioned closest to the lens. Mounting is exactly the same for both trays.
5 Slide the filter trays back into the *filter tray rails* in the Elite matte box. When you replace the filter trays you will hear an audible "click". The filter tray is now in position. You can now lock the filter tray using the retaining thumb-screws (tray lock screw), which are located on the right hand side.
6 The Elite Matte Box is supplied with a pre-set tension for the rotation, but if you want to adjust the tension of the rotating filter holder this is simply done by adjusting the screw (filter tray rotation damper) on the filter tray. Clockwise increases the tension and anti-clockwise decreases the tension.

Attaching the Elite Matte Box to Your Camera

1 The Elite clamp on adaptor ring will make a snug fit to the back of the Elite matte box aperture and the camera lens. This will ensure there are no light leaks to the lens. The Elite clamp on adaptor ring should already be in place inside the Elite matte box. If it is not, please take the Elite clamp on adaptor ring and place it inside the back of the Elite matte box (Elite matte box should be face down on a flat surface), with the thicker edge of the Elite clamp on adaptor ring going in first.
2 Take the Elite matte box and push it onto the camera lens. Please ensure that the Elite matte box is the right way up (where the filter tray handles are at the top).
3 Align the Elite matte box until it is in a horizontal plane to the camcorder. Tighten the back clamp screw, which fixes the Elite matte box to the camera lens on the camcorder. The pressure applied is only on the Elite clamp on adaptor ring and will cause no damage to the lens.