GENUS

G-LSB - Lens Support Bracket

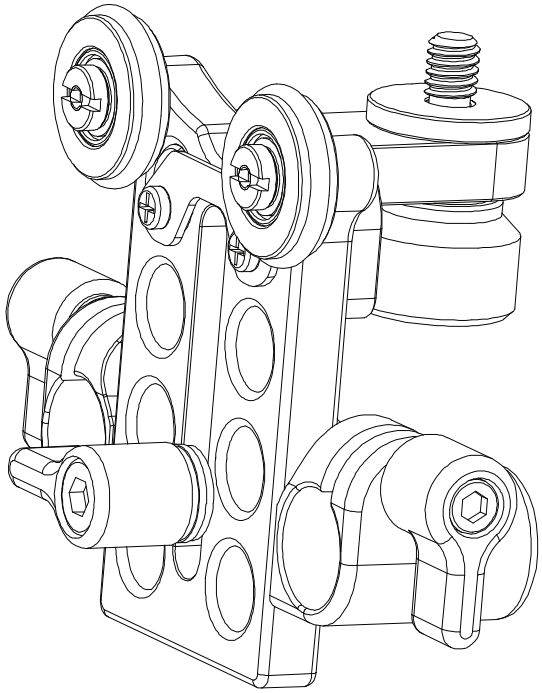

OTHER GENUS PRODUCTS

Matte Boxes • Support Bar Systems • Adaptor Plates
Adaptor Rings & Donuts • French Flags
DSLR Camera Accessories and more

For more information on full range of products
www.genustech.tv

© 2011 Genus Limited. All rights reserved.
Reproduction in whole or in part without permission is prohibited. Features and offers are subject to change without further notice.

GENUS

G-LSB - Lens Support Bracket

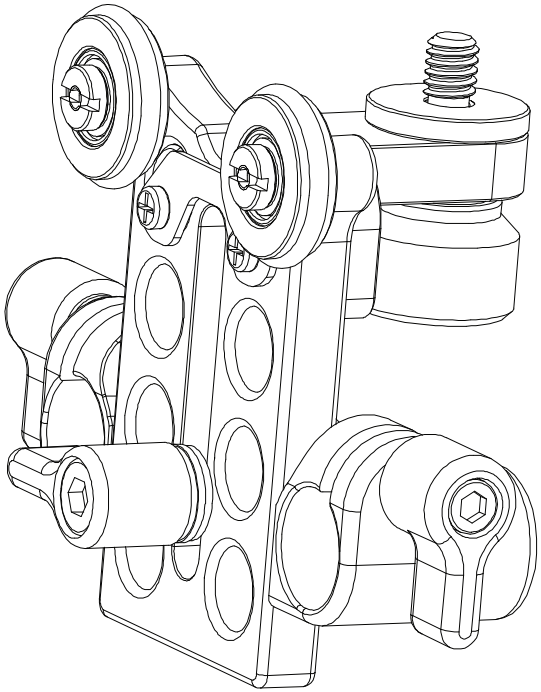

OTHER GENUS PRODUCTS

Matte Boxes • Support Bar Systems • Adaptor Plates
Adaptor Rings & Donuts • French Flags
DSLR Camera Accessories and more

For more information on full range of products
www.genustech.tv

© 2011 Genus Limited. All rights reserved.
Reproduction in whole or in part without permission is prohibited. Features and offers are subject to change without further notice.

The G-LSB Lens Support Bracket

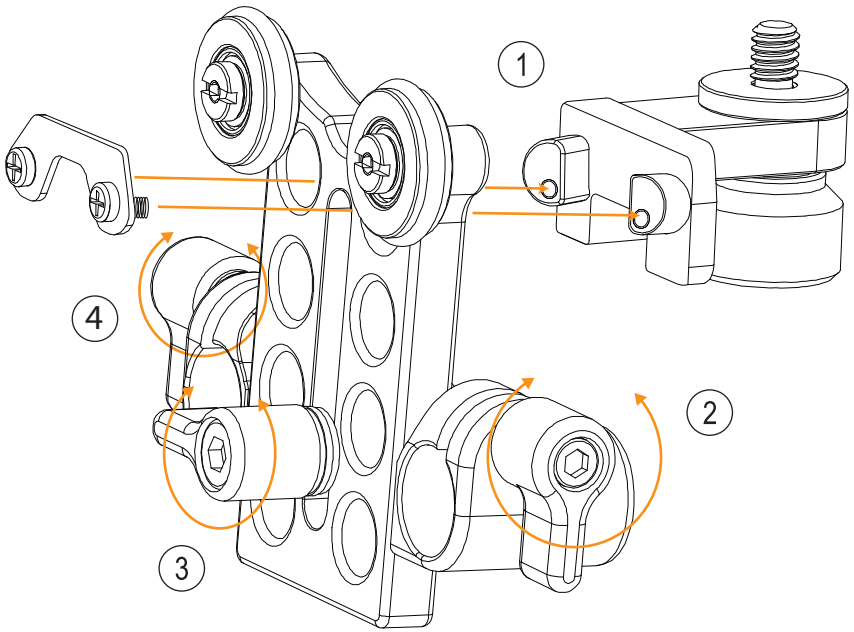

1 Attach the knob support base to the Lens Support Bracket for the lenses with a screw hole.
2 Loosen the lock-offs and attach Lens Support Bracket to 15mm rods via the holes.
3 Loosen the front knob and adjust height of rods by moving bracket up and down.
4 Tighten all lock-offs when rods are in the desired position.

The G-LSB Lens Support Bracket

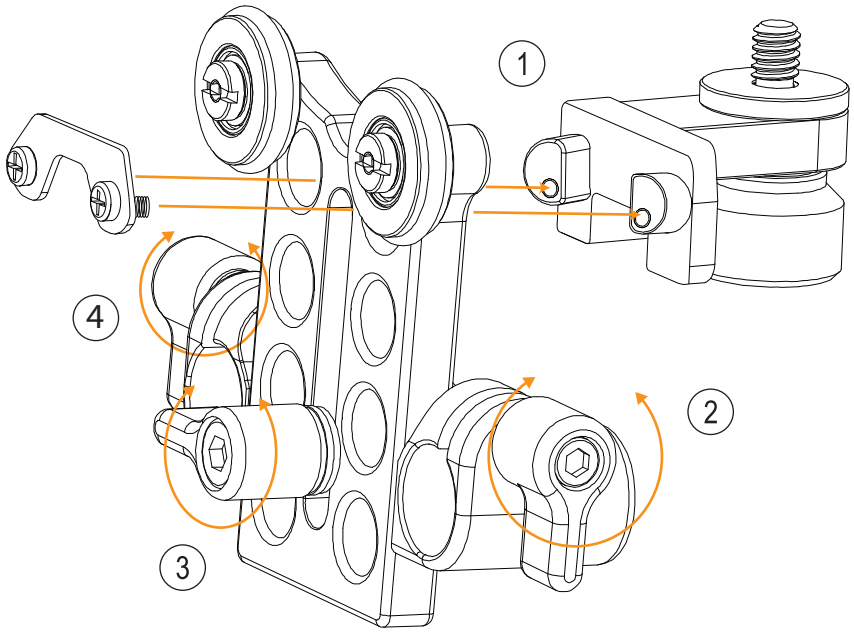

1 Attach the knob support base to the Lens Support Bracket for the lenses with a screw hole.
2 Loosen the lock-offs and attach Lens Support Bracket to 15mm rods via the holes.
3 Loosen the front knob and adjust height of rods by moving bracket up and down.
4 Tighten all lock-offs when rods are in the desired position.

GENUS